Lab Module 3: Chaos in Electronics

Ethan Yang

Abstract: The experiment explored the analog implementation of chaotic systems by physically modeling the Lorenz Attractor and the Jerk Circuit using operational amplifiers, analog multipliers, and diodes. We derived and verified the ordinary differential equations for both systems against the physical circuits by analyzing the currents across various resistances and utilizing Kirchhoff's laws and the op-amp golden rules. Both chaotic systems displayed multiple regimes, including constant voltage points, stable period motions, and period-doubling cascades.

The Lorenz Attractor

In 1963 Edward Lorenz published his famous set of coupled nonlinear first-order ordinary differential equations:

$$\frac{dx}{dt} = s(y - x)$$
$$\frac{dy}{dt} = rx - y - xz$$
$$\frac{dz}{dt} = xy - bz$$

with suggested parameters $s = 10,\ r = 28,\ b = 8/3$. The solution executes a trajectory, plotted in three dimensions, that winds around and around, neither predictable nor random, occupying a region known as its attractor. The circuit shown in Figure 1 implements these equations in an analog electronic circuit using only 3 op-amps as integrators and 2 analog multipliers to form products. Figure 2 shows the actual implemented circuit. MPY634 analog multipliers and LF412 op-amps were used.

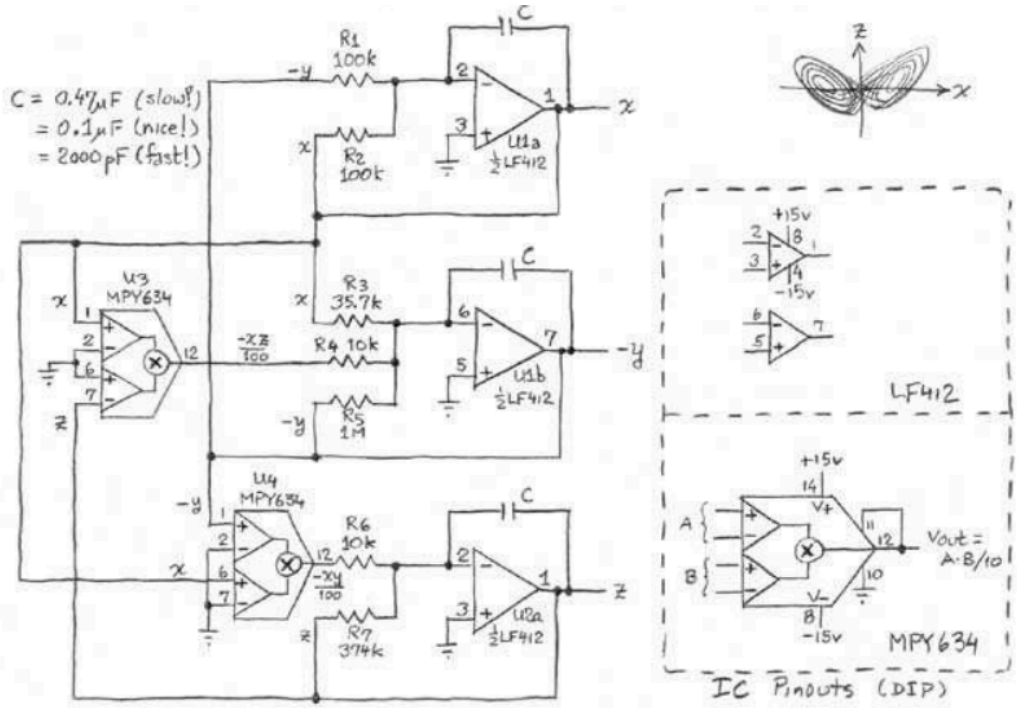

Figure 1: Lorenz Attractor Circuit Diagram

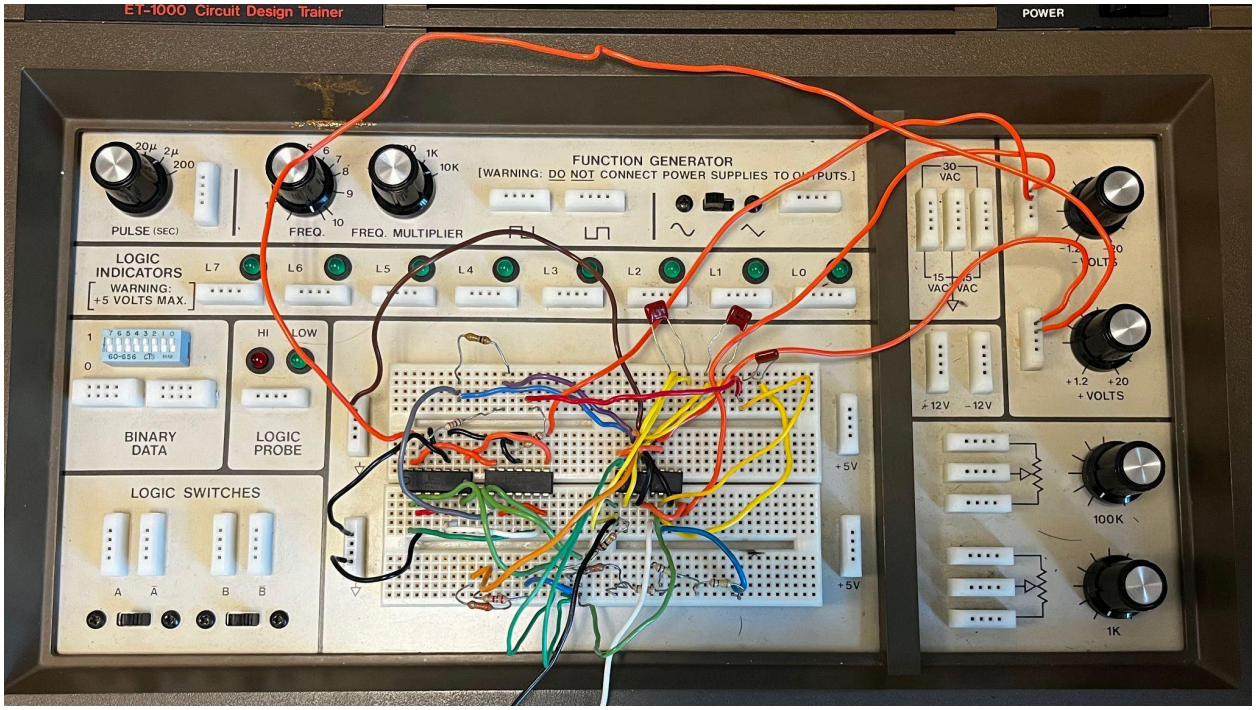

Figure 2: Lorenz Attractor Circuit Implemented on a Breadboard

To understand how the circuit implements the Lorenz equations, we first converted the voltages (represented with the subscript v) that are shown in the circuit into dimensionless variables.

$$x_v = (0.1V)x$$
$$y_v = (0.1V)y$$
$$z_v = (0.1V)z$$
$$t_s = (1M\Omega \cdot C)t$$

We analyzed the circuit in 3 parts and by each output. Using Kirchhoff's rule and the op-amp golden rules, we derived the differential equations for x_v, $-y_v$, and z_v.

$$Q_x = C \cdot x_v$$
$$\frac{-y_v}{R_1} + \frac{x_v}{R_2} = \frac{dQ_x}{dt_s} = -C\frac{dx_v}{dt_s}$$
$$Q_y = C \cdot -y_v$$
$$\frac{x_v}{R_3} - \frac{x_v z_v}{10VR_4} - \frac{y_v}{R_5} = \frac{dQ_y}{dt_s} = C\frac{dy_v}{dt_s}$$
$$Q_z = C \cdot z_v$$
$$\frac{-x_v y_v}{10VR_6} + \frac{z_v}{R_7} = \frac{dQ_z}{dt_s} = -C\frac{dz_v}{dt_s}$$

Substituting $R_1 = R_2 = 100k\Omega$, $R_3 = 35.7k\Omega$, $R_4 = R_6 = 10k\Omega$, $R_5 = 1M\Omega$, $R_7 = 374k\Omega$, and x_v, y_v, z_v as dimensionless variables, we yielded:

For x:

$$\frac{y_v}{R_1} - \frac{x_v}{R_2} = C\frac{dx_v}{dt_s}$$

$$\frac{0.1y}{10^5} - \frac{0.1x}{10^5} = C(\frac{1}{10^6 C})\frac{d(0.1x)}{dt}$$

$$0.1\frac{dx}{dt} = 10(y - x)$$

$$\frac{dx}{dt} = 10(y - x)$$

For y:

$$\frac{x_v}{R_3} - \frac{x_v z_v}{10VR_4} - \frac{y_v}{R_5} = C\frac{dy_v}{dt_s}$$

$$\frac{0.1x}{35.7\times10^3} - \frac{0.1x\cdot0.1z}{10\cdot10^4} - \frac{0.1y}{10^6} = C(\frac{1}{10^6 C})\frac{d(0.1y)}{dt}$$

$$0.1\frac{dy}{dt} = \frac{10^5}{35.7}(0.1x) - \frac{10^6}{10^5}(0.01xz) - 0.1y$$

$$0.1\frac{dy}{dt} = 280.1(0.1)x - 0.1xz - 0.1y$$

$$\frac{dy}{dt} = 28.01x - y - xz$$

For z:

$$\frac{x_v y_v}{10VR_6} - \frac{z_v}{R_7} = C\frac{dz_v}{dt_s}$$

$$\frac{(0.1x)(0.1y)}{10\cdot10^4} - \frac{0.1z}{374\cdot10^3} = C(\frac{1}{10^6 C})\frac{d(0.1z)}{dt}$$

$$0.1\frac{dz}{dt} = \frac{10^6}{10^5}(0.1x)(0.1y) - \frac{10^6}{374\cdot10^3}(0.1z)$$

$$\frac{dz}{dt} = xy - 2.673z$$

Our derived equations match Lorenz's differential equations with similar parameters. Our experimental parameters are $s = 10$, $r = 28.01$, and $b = 2.673 \approx 8/3$.

The Lorenz attractor showed 3 different regimes as we varied r by varying R_3. The dimensionless r could be derived with $r = \frac{1M\Omega}{R_3}$. When R_3 is large (approximately $R_3 > 49.2k\Omega$), which corresponds to a small r value ($r < 20.3$), the oscilloscope simply shows a dot that represents constant voltage. At this stage, the system reached a stable state where $\frac{dx}{dt} = \frac{dy}{dt} = \frac{dz}{dt} = 0$ and the time derivative disappears ($\frac{d}{dt} = 0$). To verify that our circuit successfully demonstrates the Lorenz differential equations, we picked three R_3 values, measured the corresponding x, y, and z voltages, solved the differential equations, and plugged the variables back into the solved equations to see if they satisfied them.

$$\frac{dx}{dt} = s(y - x) = 0$$

$$(y - x) = 0$$

$$x = y$$

$$\frac{dz}{dt} = xy - bz = 0$$

$$xy = bz$$

$$z = \frac{xy}{b}$$

For $R_3 = 86.1k\Omega,\ r = \frac{1M\Omega}{R_3} = \frac{10^6}{86.1 \cdot 10^3} \approx 11.61$

$$x_v = 0.651\,V,\ y_v = 0.638\,V,\ z_v = 1.235\,V$$

$$x = 6.51, y = 6.38,\ z = 12.35$$

$$x = 6.51 \approx y = 6.38$$

$$z = \frac{6.51 \cdot 6.38}{8/3} = 15.57 \approx 12.35$$

$$\%\ error = \frac{|12.35 - 15.57|}{15.57} = 20.7\%$$

For $R_3 = 105k\Omega, r = \frac{1M\Omega}{R_3} = \frac{10^6}{105 \cdot 10^3} \approx 9.52$

$$x_v = 0.608\,V,\ y_v = 0.595\,V,\ z_v = 1.031\,V$$

$$x = 6.08, y = 5.95,\ z = 10.31$$

$$x = 6.08 \approx y = 5.95$$

$$z = \frac{6.08 \cdot 5.95}{8/3} = 13.57V \approx 10.31V$$

$$\%\ error = \frac{|10.31 - 13.57|}{13.57} = 24\%$$

For $R_3 = 114.3k\Omega, r = \frac{1M\Omega}{R_3} = \frac{10^6}{114.3 \cdot 10^3} \approx 8.75$

$$x_v = 0.591\,V,\ y_v = 0.577\,V,\ z_v = 0.956\,V$$

$$x = 5.91, y = 5.77,\ z = 9.56$$

$$x = 5.91 \approx y = 5.77$$

$$z = \frac{5.91 \cdot 5.77}{8/3} = 12.79 \approx 9.56$$

$$\%\ error = \frac{|9.56 - 12.79|}{12.79} = 25.3\%$$

The 3 proposed R_3 satisfied the differential equations for a small r value within a reasonable range of error of around 20-25%. This error is likely due to the voltage offsets and imperfections in our hardware, including the multiplier and the op-amps.

For other cases, when R_3 is small (approximately $R_3 < 8.2k\Omega$), which corresponds to a large r value ($r > 122$), the oscilloscope also showed a single dot that represents the supplied voltage 15V because the op-amp became saturated.

When R_3 lies between the range $10.5k - 49.2k\Omega$, which corresponds to $20.3 < r < 95.2$, the oscilloscope displayed the attractor like shown in Figure 3. Specifically, when the attractor is in stable periodic motion, the oscilloscope would only display 1 orbit of the attractor. This happened at around $R_3 = 9.4\Omega$ or $r = 10.6$, and is shown in Figure 4.

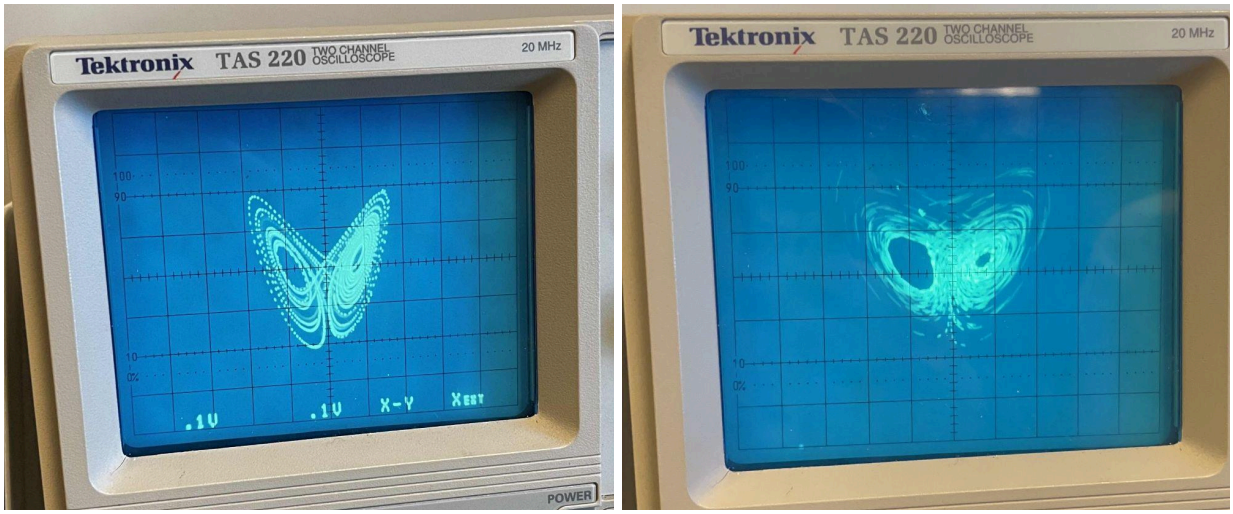

(a) (b)

Figure 3: The Lorenz Attractor shown on an Oscilloscope

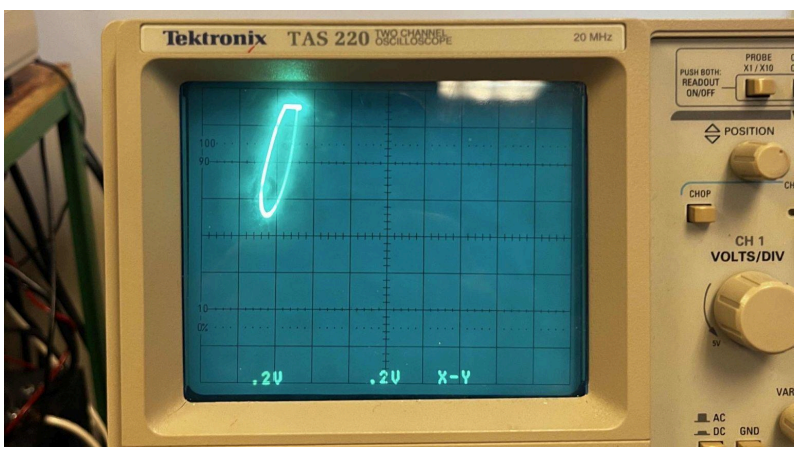

Figure 4: Stable Periodic Motion of a Lorenz Attractor shown on an Oscilloscope

We also tried different capacitance values to see their effects on the Lorenz Attractor. Recall our conversion of time variable t:

$$t_s = (1M\Omega \cdot C)t$$

The capacitance acts as a time scaling factor, where a large capacitance would make the circuit run slower and a small capacitance would make the circuit run faster. For example, a large capacitance value of $0.01\mu F$ was used in Figure 3(a). The oscilloscope showed a clear and crisp butterfly shape as the circuit was running so slowly that the dot could take its time to draw each individual loop while older loops faded away before the screen got too clustered. On the other hand in Figure 3(b), a small capacitance of $100pF$ was used. As a result, the circuit ran so fast that the electron beam was tracing the butterfly shape many times per second. The shapes didn't have time to fade away and ultimately blurred together to create the dense looking web.

The Jerk Circuit

While the Lorenz system is defined by a set of 3 first-order ordinary differential equations, chaotic dynamics can also appear from a single third-order ordinary differential equation. In their 2010 paper *Chaos from Jerk Circuit*, Shaik and Mandal published a simplified chaotic system:

$$\dddot{x} = A\ddot{x} - \dot{x} + |x| - 1$$

By varying A, the system's trajectory transitions from stable periodic motion, through a period-doubling cascade, and ultimately to a chaotic attractor. The analog implementation consists of op-amps as integrators and an inverting amplifier and two diodes to generate the absolute value term $|x|$ as diodes can act as a one way valve for current. To derive the equation from our circuit diagram shown in Figure 5, we have to analyze the circuit separately, when the output is $+\ x$ and when the output is $-\ x$. Figure 6 shows the actual implementation of the circuit. LF412 op-amps, silicon diodes, $1k\Omega$ resistors, and $0.1\mu F$ capacitors were used.

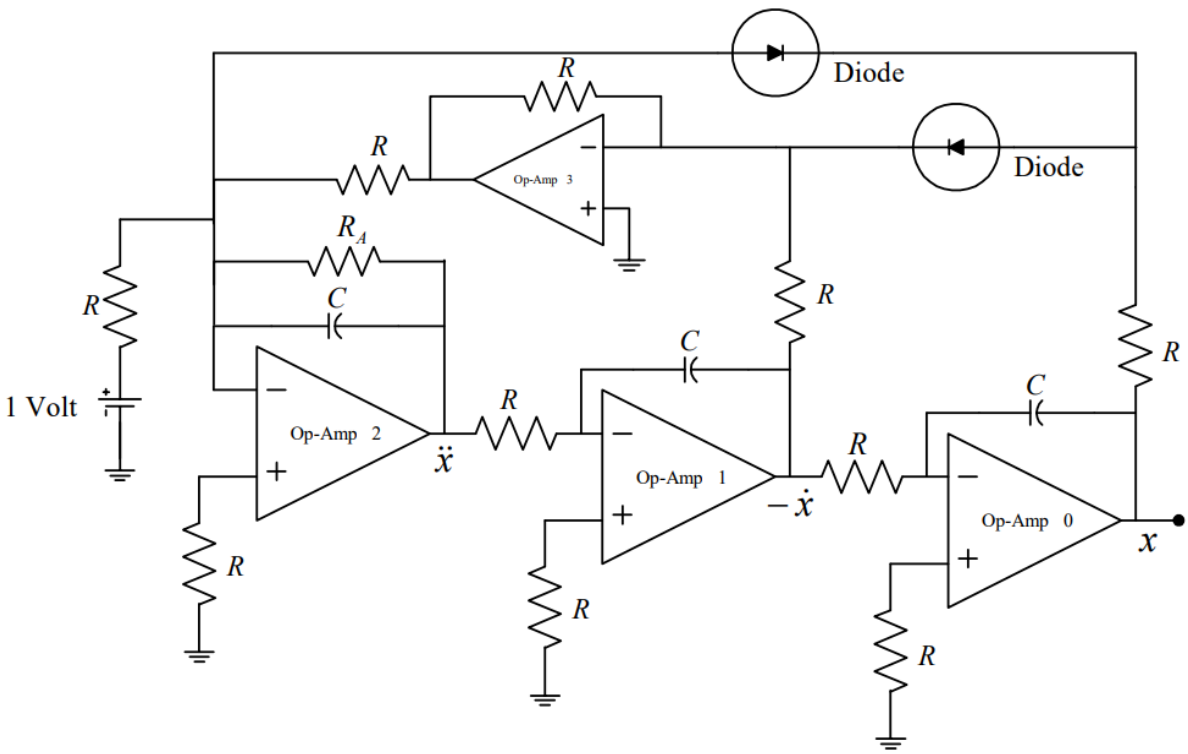

Figure 5: Jerk Circuit Diagram

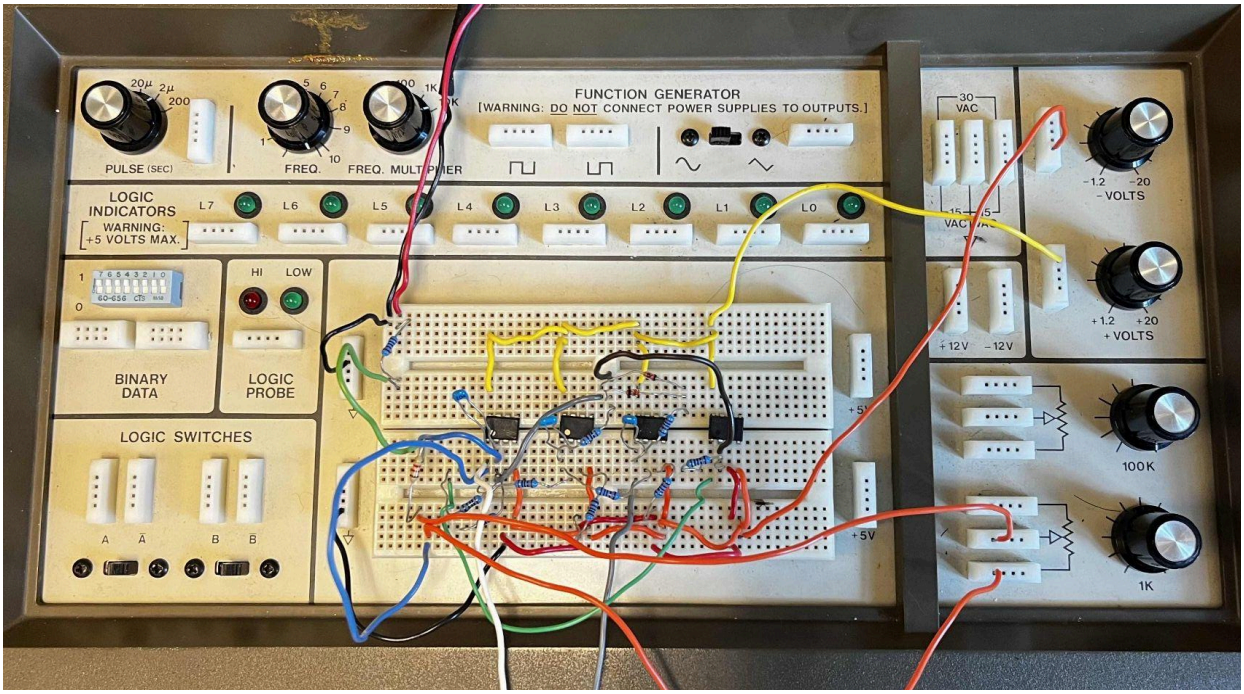

Figure 6: Jerk Circuit Implemented on a Breadboard

Similar to the Lorenz circuit, we had to convert our variables into dimensionless ones.

$$t_s = RCt$$

When $x > 0$, we could ignore the top wire with the diode pointing to the right, as current would be able to flow through. Since op-amp 0 and 1 function as integrators, we could figure out their inputs and outputs. For a basic RC circuit:

$$\frac{V_{in}}{R} = C\frac{-dV_{out}}{dt_s}$$

$$V_{in} = -RC\frac{dV_{out}}{dt_s}$$

Therefore, the input of op-amp 0 where the output is x is:

$$V_{in_0} = -RC\frac{dx}{dt_s}$$

Similarly, the input of op-amp 1 where the output is the V_{in} from the last line is:

$$V_{in_1} = -RC\frac{-RC\frac{dx}{dt_s}}{dt_s} = R^2C^2\frac{d^2x}{dt_s^{\,2}}$$

Op-amp 3 functions as an inverting amplifier, and for a basic inverting amplifier:

$$\frac{V_{in}}{R_1} = \frac{-V_{out}}{R_2}$$

$$V_{out} = -\frac{R_2}{R_1}V_{in}$$

The input of op-amp 3 is the combination of the output from op-amp 0 and 1. We could use this information to derive the output of op-amp 3.

$$V_{out_3} = -\frac{R_2}{R_1}(-RC\frac{dx}{dt_s} + x)$$
$$R_1 = R_2 = R$$
$$V_{out_3} = RC\frac{dx}{dt_s} - x$$

Using Kirchhoff's rule at op-amp 2 to solve for V_A, we found that the sum of the current coming from the 1V battery, the current from op-amp 2's output, and the current from the inverting amplifier output equals the current through the op-amp 2 capacitor:

$$(\frac{1V}{R}) + (\frac{R^2C^2}{R_A}\frac{d^2x}{dt_s^{\,2}}) + (C\frac{dx}{dt_s} - \frac{x}{R}) = -CR^2C^2\frac{d^3x}{dt_s^{\,3}}$$
$$\frac{1}{R} + \frac{R^2C^2}{R_A}\cdot\frac{1}{R^2C^2}\ddot{x} + C\frac{1}{RC}\dot{x} - \frac{x}{R} = -CR^2C^2\frac{1}{R^3C^3}\dddot{x}$$
$$\frac{1}{R} + \frac{1}{R_A}\ddot{x} + \frac{1}{R}\dot{x} - \frac{x}{R} = -\frac{1}{R}\dddot{x}$$
$$-1 - \frac{R}{R_A}\ddot{x} - \dot{x} + x = \dddot{x}$$
$$\dddot{x} = -\frac{R}{R_A}\ddot{x} - \dot{x} + x - 1$$
$$R_A = \frac{R}{a}$$
$$\dddot{x} = -a\ddot{x} - \dot{x} + x - 1$$
$$\dddot{x} = A\ddot{x} - \dot{x} + x - 1$$

On the other hand, when $x < 0$, we could ignore the wire with the diode pointing to the left and flowing into op-amp 3. The inputs and outputs of the integrators remained the same. However, the inverting amplifier now only has 1 input voltage.

$$V_{out_3} = -\frac{R_2}{R_1}(-RC\frac{dx}{dt_s})$$
$$R_1 = R_2 = R$$
$$V_{out_3} = RC\frac{dx}{dt_s}$$

Kirchhoff's rules were set up differently too. We found that the sum of the current coming from the 1V battery, the current from op-amp 2's output, the current from the inverting amplifier output, and the current from op-amp 0's output (through the top wire) equals the current through the op-amp 2 capacitor:

$$(\frac{1V}{R}) + (\frac{R^2C^2}{R_A}\frac{d^2x}{dt_s^{\,2}}) + (C\frac{dx}{dt_s}) + (\frac{x}{R}) = -CR^2C^2\frac{d^3x}{dt_s^{\,3}}$$
$$\frac{1}{R} + \frac{R^2C^2}{R_A}\cdot\frac{1}{R^2C^2}\ddot{x} + C\frac{1}{RC}\dot{x} + \frac{x}{R} = -CR^2C^2\frac{1}{R^3C^3}\dddot{x}$$
$$\frac{1}{R} + \frac{1}{R_A}\ddot{x} + \frac{1}{R}\dot{x} + \frac{x}{R} = -\frac{1}{R}\dddot{x}$$
$$-1 - \frac{R}{R_A}\ddot{x} - \dot{x} - x = \dddot{x}$$
$$\dddot{x} = -\frac{R}{R_A}\ddot{x} - \dot{x} - x - 1$$

$$R_A = \frac{R}{a}$$
$$\dddot{x} = -a\ddot{x} - \dot{x} - x - 1$$
$$\dddot{x} = A\ddot{x} - \dot{x} - x - 1$$

Combining the results for the cases $x > 0$ and $x < 0$, we derived the Jerk circuit differential equation $\dddot{x} = A\ddot{x} - \dot{x} + |x| - 1$.

By varying A and R_A, we observed the system's period double and ultimately turn into a chaotic attractor. Experimentally, we initially observed period 1 at $a = 0.833$ ($R_A = 1.2k\Omega$), period 2 at $a = 0.578$ ($R_A = 1.68k\Omega$), period 4 at $a = 0.508$ ($R_A = 1.97k\Omega$), and chaos at $a = 0.495$ ($R_A = 2.02k\Omega$). In other words, we should observe period 1 within the range $0.578 < a \leq 0.833$, period 2 within the range $0.508 < a \leq 0.578$, period 4 within the range $0.495 < a \leq 0.508$, and chaos within the range $a \leq 0.495$. The trajectories of the Jerk Circuit for each period are shown below in Figure 7-10.

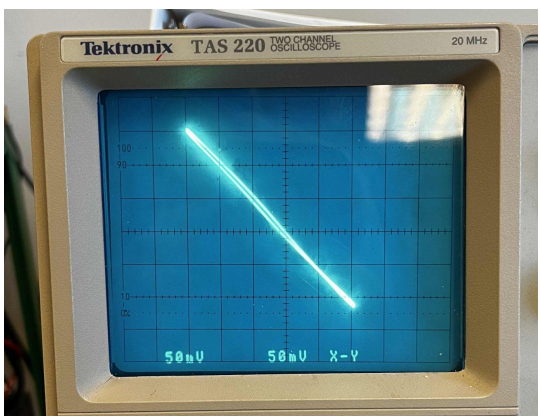

Figure 7: Period 1 at $a = 0.833$

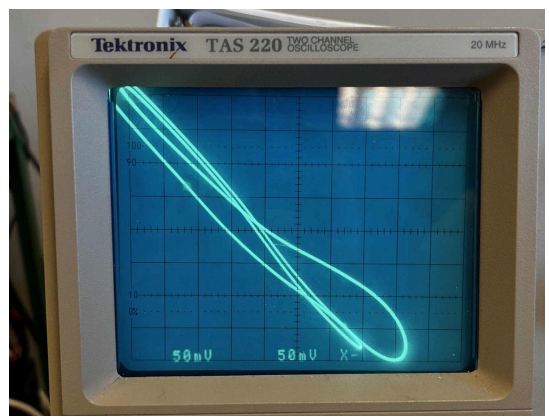

Figure 8: Period 2 at $a = 0.578$

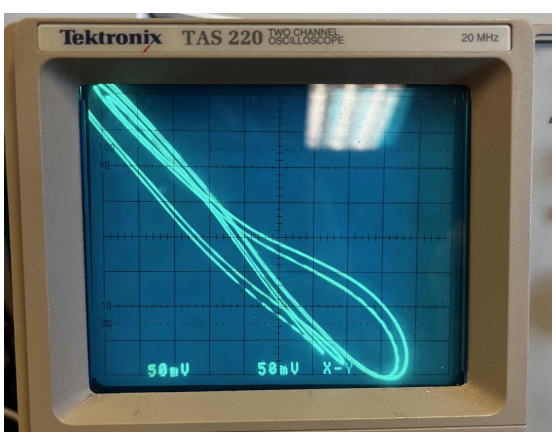

Figure 9: Period 4 at $a = 0.508$

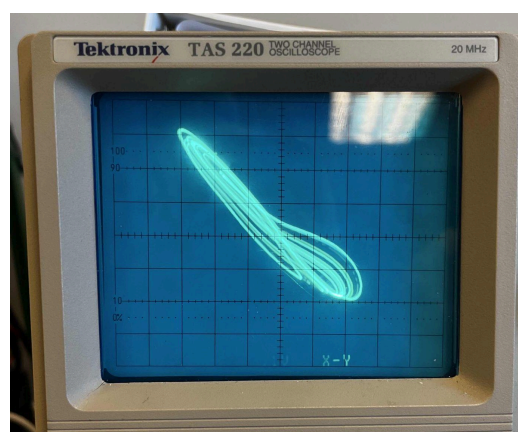

Figure 10: Chaos at $a = 0.495$

Theoretically, according to Shaik and Mandal's paper, period 1 appears at $a = 0.714$ ($R_A = 1.4k\Omega$), period 2 appears at $a = 0.606$ ($R_A = 1.65k\Omega$), period 4 appears at $a = 0.575$ ($R_A = 1.75k\Omega$), period 8 appears at $a = 0.549$ ($R_A = 1.82k\Omega$), and chaos appears at $a = 0.524$ ($R_A = 1.91k\Omega$). Unfortunately, only the theoretical value of a for period 1 fell into our corresponding experimental range. This was likely due to tiny offsets in our resistors and the variable resistor that created a scaling error across all the a values.